CODE	DESCRIPTION	POS.	GR.
281484A84	FRONT PANEL	1	
273098A	ADHESIVE LABEL	2	G0052A
281485B84	FRONT PANEL	2	G0052A
218974A	UNIT COVER	3	
242353A54	HANDLE	4	
276571A	AXIAL FAN	5	
255644B	MAIN CABLE	6	
242343A	SPRING	7	G0007A
242346A	COMPRESSOR KLIXON SPRING	7	G0007A
276147A	GP14PB CUBIGEL COMPRESSOR	7	G0007A
277575A	COMPRESSOR COVER	7	G0007A
277576A	COMPRESSOR PLASTIC COVER	7	G0007A
276567A	COMPR.KLIXON	8	G0007A
276569A	CUBIGEL COMPR. RELAY	9	G0007A
281344A72	MICROSWITCH HOLDER	10	G0298A
281483A72	MICRO BUTTON	10	G0298A
281199B	FLOATING	11	G0003A
281448B72	FLOATING HOLDER	11	G0003A
281639A69	CONDENSE TANK	11	G0003A
256489A	CONDENSER COIL	12	
281229C72	DRAIN PAN	13	
275930A	MICROSWITCH	14	
276506A	THERMOSTAT	15	
281509A	VIBRATION-DAMPING COMPRESSOR	16	
243962A	VIBRATION-DAMPING SPACER	17	
276145A	EF83161.3 MICROSWITCH	18	
144700A2	WASHER NUT	19	
281643A84	CONTROL PANEL	20	
276516A	HUMIDITY SENSOR	21	
276514A	BIPOLAR SWITCH	22	
276550A	ORANGE LED	23	
276551A	GREEN LED	24	
281640A84	SWITCH KEY	25	
281641A84	HUMIDOSTAT HANDLE	26	
276051A	TERMINAL BOARD	27	
255605A70	POWER CABLE	28	
315123A	BASE	29	
279304A	WHEEL	31	
271944A	FRONT AIR FILTER	32	
213300A	ANGLE FRAME	34	
281649A	POLYCARBONATE LABEL	35	
255640C	MAIN BOARD CABLE	36	

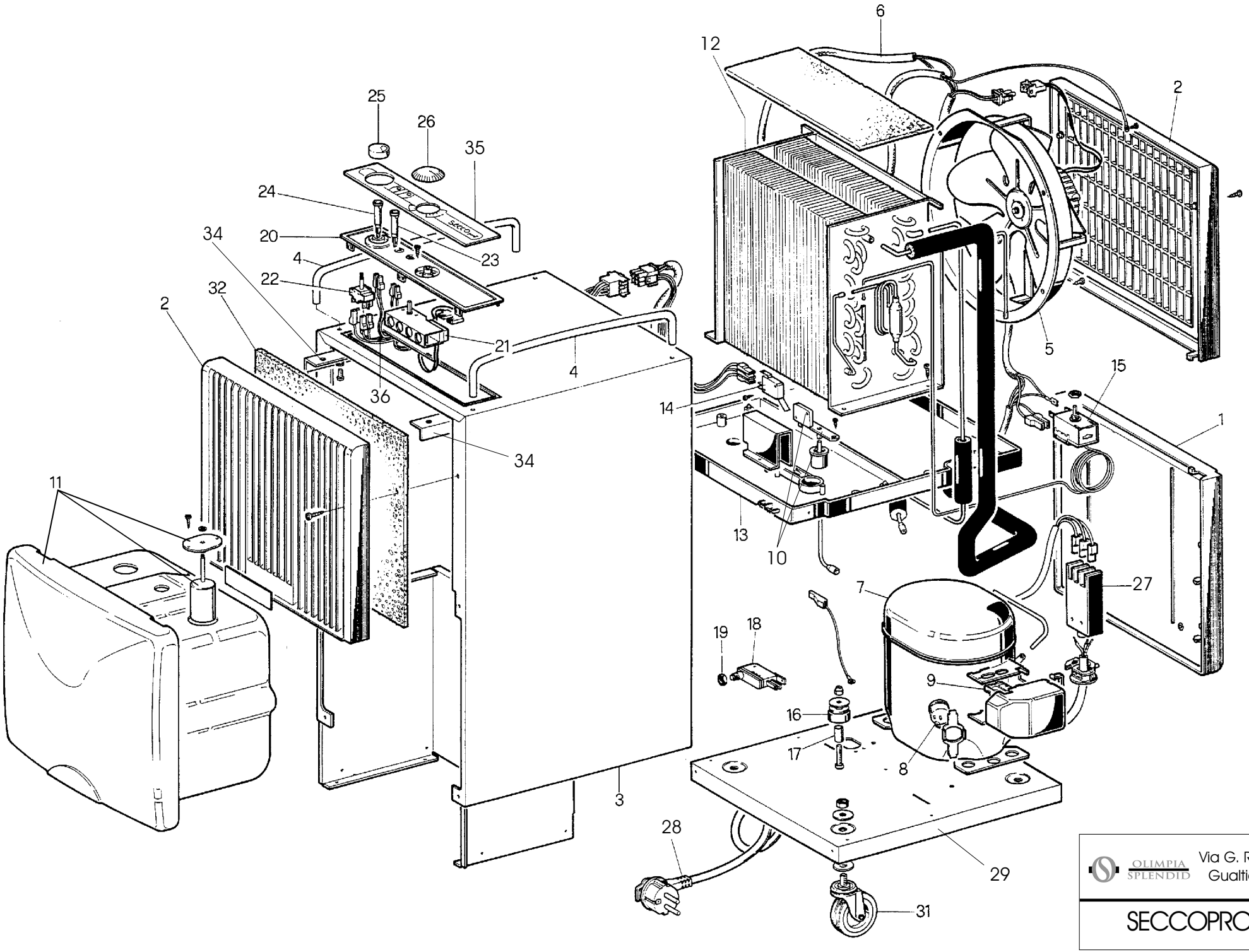

OLIMPIA SPLENDID
Via G. Rossa 1-3
Gualtieri (R.E.)

SECCOPROF

Agg. Settembre 2005 - RIF: 010.01